Primostar® Crack Control System

(WPM® Crack Inducing Waterstop)

ART.NR. 0004

20.07.2026

Waterproofing element for below-grade reinforced cast-in-place concrete structures that control and waterproofs concrete shrinkage cracks while maintaining the structure's strength properties.

PRODUCT DESCRIPTION:

The Primostar® Crack Control System is a keyway-shaped galvanized steel sheet waterproofing element for below-grade reinforced concrete structures that consists of 2 components:

- Galvanized steel sheet - 150 mm wide with a special polymer coating that provides a waterproof connection with concrete.
- 2× Z-shaped galvanized steel plates with a width of 50 mm, 60 mm, 80 mm or 100 mm, depending on the structure thickness.

The waterproofing element is installed between the reinforcement rebars within a calculated distance from each other before the casting process. The Z-shaped steel plates connected perpendicularly to the galvanized steel sheet give the controlled shrinkage crack a binding keyway shape that maintains the structure's strength properties.

Patented in the United Arab Emirates, the United States, Ukraine, and Estonia.
European patent pending.

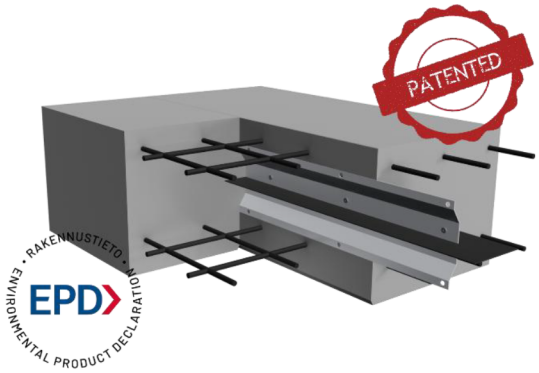

PRODUCT & COMPANY CERTIFICATES:

EPD Certificate - RTS_283_24
ISO 9001:2015 - EE008413 (Quality Management System)
ISO 14001:2015 - EE008412 (Environmental Management System)

AREA OF APPLICATION:

The Primostar® Crack Control System is used in below-grade cast-in-place concrete structures between the reinforcement steel in the wall and the floor slab to make a controlled and watertight binding keyway-shaped shrinkage crack. The element is installed between the reinforcement rebars at a calculated distance depending on the design.

PROPERTIES:

- Controlled and waterproofed pre-defined shrinkage crack point
- Load-bearing watertight binding keyway-shaped shrinkage crack
- Special coating, highly elastic, not reactive with water
- The polymer coating turns homogeneous with concrete
- Watertight against pressurized water up to 24 m (2.4 br), officially tested at TalTech University - N° 372-A/19
- Tested for water pressure up to 15 bar - test protocol no.1/2024
- Made in Estonia

SPECIFICATIONS:

- Steel material: galvanized steel
- Steel sheet width: 150 mm
- Steel sheet length: 2,2 m
- Steel sheet thickness: 0,7m
- Coating: polymer coating
- Thickness of the complete sheet: approx. 1,2 mm
- Color:
  - Polymer coating: dark grey
  - Galvanized steel sheet: silver
- Z-shaped galvanized steel sheet: 50 mm, 60 mm, 80 mm, 100 mm
- Temperature resistance: −35°C to +75°C
- Working temperature: no limits

The information given on the product page is based on and corresponds to the available information. The warranty covers the materials and does not extend to their incorrect installation and intended use. It is the user's responsibility to assess the material's suitability for the place of use. In case of doubt, it is necessary to carry out trial tests or ask for advice from the manufacturer.

Primostar OÜ
Männiku tee 104 A, 11216 Tallinn

primostar@primostar.eu

primostar.eu

Primostar®

CHARACTERISTICS AND ADVANTAGES:

- Easy to install, up to 80% installation labor savings over traditional waterproofing
- Retains structure's strength properties (due to binding keyway-shaped shrinkage crack form, weakens < 10%)
- Can be designed for load-bearing structures
- Waterproofs designed shrinkage cracks
- Makes it safe to pour large amounts of concrete at once
- Special polymer coating does not react with water
- Turns homogeneous with concrete – more watertight seal!
- Can be used in cooperation with other types of waterstops
- Life expectancy in the structure - structures lifetime
- Simple design and easy installation reduce potential installation errors

PACKAGE:

6 x 2,2 ft main detail, 12 x Z-shaped metal sheet details, joint clips, metal screws

STORAGE:

36 months in cool and dry conditions with the original package

INSTALLATION:

Install the element between the reinforcement rebars at the specified spacing, taking into account the structural dimensions. Connect adjacent elements using clips, ensuring an overlap of 7 -10 cm. Secure the element to the reinforcement with binding wire.

The elements are installed at a calculated distance, depending on the dimensions of the concrete structure. Then, a triangular chamfer profile must be installed on both or one of the inner sides of the formwork, which depends on the design. Chamfer profile marks and finishes the location of the shrinkage crack.

Continuing connection - Ensure that the waterstop overlap is 7 -10 cm. Before concrete casting, place the overlapping ends tightly on top of each other and secure the joint with the clamps included in the kit. If necessary, screws may also be used, but only at the outer edge of the waterstop. ***)**

All PRIMOSTAR® waterproofing elements together in a system create an uninterrupted connection between all construction joints and controlled shrinkage cracks in the reinforced concrete structure.

NB! The installation may differ depending on the field of use. If in doubt, ask the importer for more information. The metal sheet coating is resistant to many chemicals. If necessary, ask the importer for more information.

***)** Alternative joint connection with glue – The overlap of waterstop ends can also be installed with glue if the waterstop is placed before the concrete cast. Ensure that the ends to be connected are clean, place them tightly on top of each other, and secure the connection with clamps. If necessary, screws may also be used, but they must be installed only at the outer edge of the waterstop!

RECOMMENDED TOOLS:

Connecting clips, binding wire, binding hook, screwdriver (battery drill), and metal screws.

SAFETY:

Wear gloves and other personal protective equipment when handling and installing the product.

The information given on the product page is based on and corresponds to the available information. The warranty covers the materials and does not extend to their incorrect installation and intended use. It is the user's responsibility to assess the material's suitability for the place of use. In case of doubt, it is necessary to carry out trial tests or ask for advice from the manufacturer.

Primostar OÜ
Männiku tee 104 A, 11216 Tallinn

primostar@primostar.eu

primostar.eu

USE IN FOUNDATION SLAB AND CEILING SLAB:

NB! The installation steps given are recommended, and the actual installation distances may differ from the recommended ones.

The installation location and distance of the profiles depend on the shape of the foundation and ceiling slab. Also, the structure's thickness and the reinforcement bars' diameter used.

The recommended maximum installation step for the profiles is as follows:

On the lower side of the foundation slab, it is recommended to install a triangular chamfer element in the same place as the profile (e.g., 30×30×43 mm in the foundation slab and 20×20×21 mm in the ceiling slab) to facilitate the formation of a crack at the desired location.

PRIMOSTAR® CRACK CONTROL SYSTEM in foundation slab:

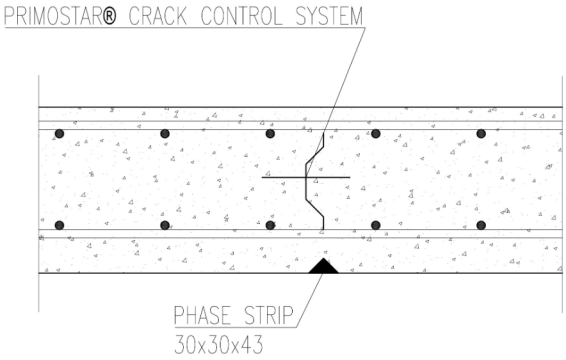

PRIMOSTAR® CRACK CONTROL SYSTEM in ceiling slab:

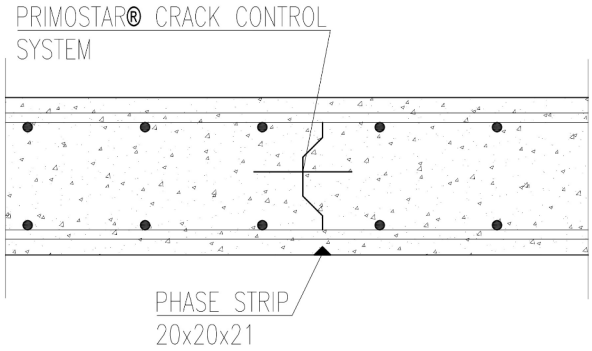

USE IN WALLS:

To use the PRIMOSTAR® CRACK CONTROL SYSTEM in walls, we have created a 3D Automatic Crack Inducer Calculator, which shows the exact locations of the crack-inducing element and other construction joint profiles in the structure along with the consumption of different materials.

PRIMOSTAR® CRACK CONTROL SYSTEM in the wall:

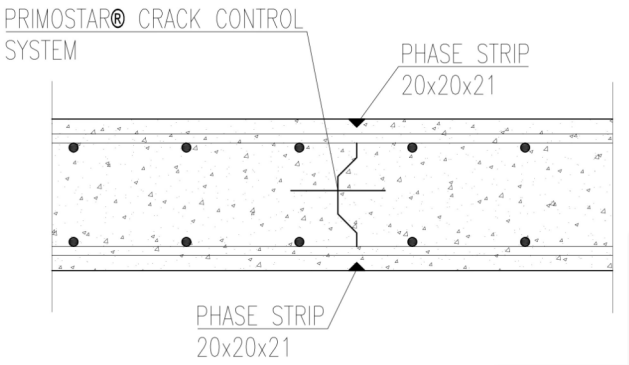

The information given on the product page is based on and corresponds to the available information. The warranty covers the materials and does not extend to their incorrect installation and intended use. It is the user's responsibility to assess the material's suitability for the place of use. In case of doubt, it is necessary to carry out trial tests or ask for advice from the manufacturer.

Primostar OÜ
Männiku tee 104 A, 11216 Tallinn
primostar@primostar.eu
primostar.eu